REV	DESCRIPTION	DATE	ECN
--	----------	--------	--------
--	----------	--------	--------

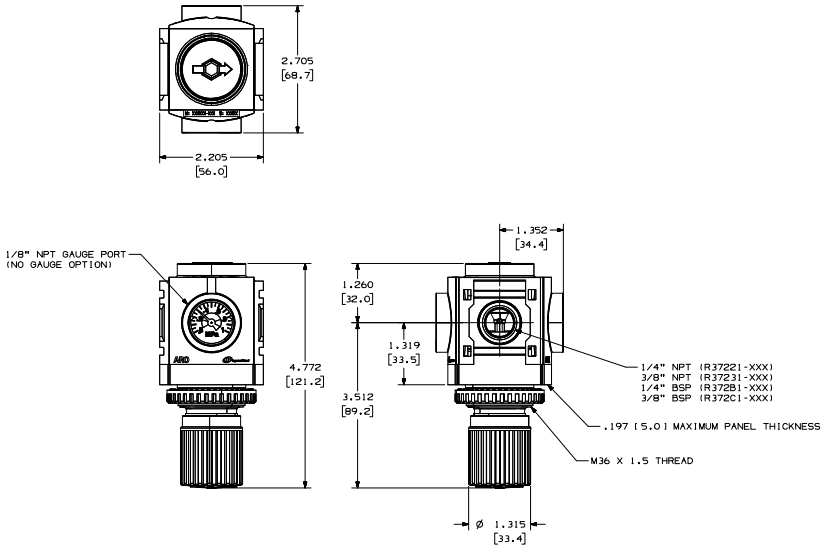

OUTLINE DRAWING

NEXT ASM. (REF)	USED ON (REF)
----------	----------

UNLESS OTHERWISE SPECIFIED DIMENSIONS ARE INCHES PER ANSI Y14.5M-1994

REMOVE ALL BURRS AND SHARP EDGES
BREAK NOT TO EXCEED .015

ANGLES: (+/-2°)
CONC .015 TIR.

ALL MACHINED SURFACES ARE 125

THIRD ANGLE PROJECTION

REPRODUCTION IN WHOLE OR IN PART IS PROHIBITED WITHOUT WRITTEN PERMISSION FROM INGERSOLL-RAND COMPANY. ALL RIGHTS RESERVED.

COPYRIGHT © 2008
INGERSOLL-RAND COMPANY
ALL RIGHTS RESERVED

THIS DOCUMENT CONTAINS CONFIDENTIAL AND TRADE SECRET INFORMATION. IT IS THE PROPERTY OF INGERSOLL-RAND COMPANY AND IS LOANED TO THE RECIPIENT ON THE CONDITION THAT THE RECIPIENT AGREES AND RETENTION OF THE DOCUMENT ACCEPTS THE DOCUMENT IN CONFIDENCE AND AGREES THAT, EXCEPT AS AUTHORIZED IN WRITING BY INGERSOLL-RAND COMPANY, IT WILL (1) NOT REPRODUCE THE DOCUMENT OR ANY COPY THEREOF OR USE THE DOCUMENT, OR THE CONTENT OF INFORMATION THEREIN, (2) NOT COPY THE DOCUMENT, (3) NOT DISCLOSE TO OTHERS EXCEPT THE DOCUMENT OR THE CONFIDENTIAL OR TRADE SECRET INFORMATION THEREIN, (4) NOT USE THE DOCUMENT FOR ANY PURPOSE TO RETURN THE DOCUMENT, UPON DEMAND, RETURN THE DOCUMENT, ALL COPIES THEREOF, AND ALL MATERIAL COPIED THEREFROM.

MATERIAL: N/A
N/A
HEAT TREAT: N/A
FINISH: N/A

ENGLISH
[D] DENOTES REQUIRED MERGE DIMENSION

DWN BY	ROSHKO	07-14-08
CKD BY	CONNIN	07-14-08
PROJECT LEADER (MFG)	THORP	07-14-08

THE ONLY TRUE REPRESENTATION OF A PRODUCT IS THE 3D SOLID MODEL.

INGERSOLL-RAND
PRODUCTION EQUIPMENT

Ingersoll-Rand Company
Tool Products Division
Rum GP

DRAWING TITLE
REGULATOR

ECN	PART NO.	REV
15313216	R372X1-X	00

SIZE D SCALE [1] SHEET 1 OF 1