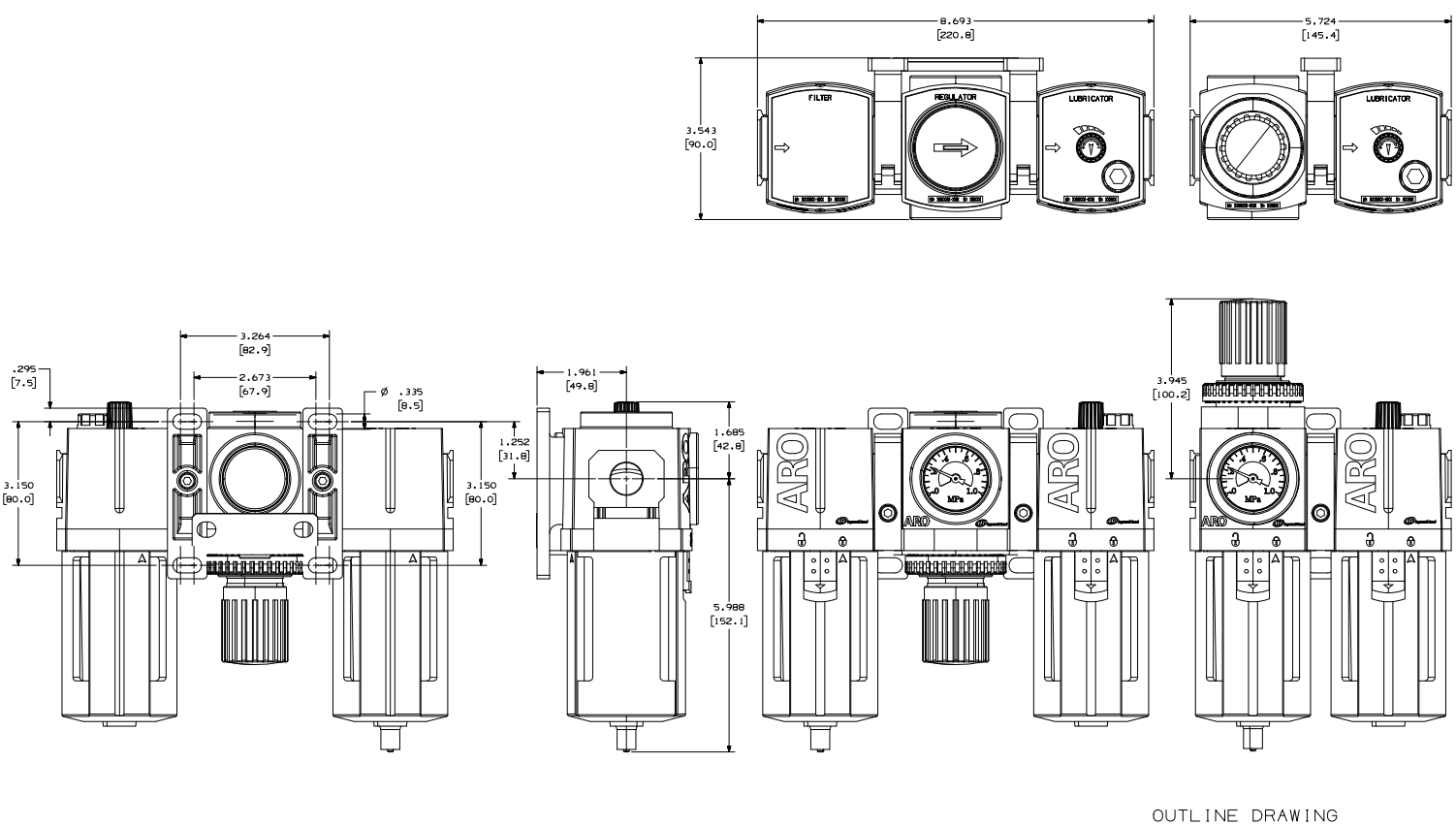


OUTLINE DRAWING

| REV | DESCRIPTION | DATE | ECN |
|---|---|---|---|
| -- | ---------- | -------- | -------- |
| -- | ---------- | -------- | -------- |

| NEXT ASM. (REF) | USED ON (REF) |
|---|---|
| -------- | -------- |

UNLESS OTHERWISE SPECIFIED DIMENSIONS ARE INCHES PER ANSI Y14.5M-1994

REMOVE ALL BURRS AND SHARP EDGES. BREAK NOT TO EXCEED .015

ANGLES: 1/2° ±2°
CONC .015 TIR.

ALL MACHINED SURFACES ARE 125

THIRD ANGLE PROJECTION

COPYRIGHT © 2006 INGERSOLL-RAND CO. ALL RIGHTS RESERVED

THIS DOCUMENT CONTAINS CONFIDENTIAL AND TRADE SECRET INFORMATION. IT IS THE PROPERTY OF INGERSOLL-RAND COMPANY. ITS USE IS LIMITED TO THE PURPOSE FOR WHICH IT IS LOANED. THE USE AND RETENTION OF THE DOCUMENT ACCEPTS THE DOCUMENT IN CONFIDENCE AND AGREES THAT, EXCEPT AS AUTHORIZED IN WRITING BY INGERSOLL-RAND COMPANY, IT SHALL (1) NOT REPRODUCE THE DOCUMENT OR ANY COPY THEREOF, OR TRANSCRIBE, DISCLOSE OR TRANSFER INFORMATION THEREIN, (2) NOT COPY THE DOCUMENT, (3) NOT DISCLOSE TO OTHERS EXCEPT THE DOCUMENT OR THE CONFIDENTIAL OR TRADE SECRET INFORMATION CONTAINED THEREIN, (4) NOT USE THE DOCUMENT AND TO RETURN THE DOCUMENT, UPON DEMAND, RETURN THE DOCUMENT, ALL COPIES THEREOF, AND ALL MATERIAL COPIED THEREFROM.

| | |
|---|---|
| MATERIAL | N/A |
| | N/A |
| HEAT TREAT | N/A |
| FINISH | N/A |

ENGLISH

| | | |
|---|---|---|
| ◇ | DENOTES REQUIRED MERGE DIMENSION | |
| DWN BY | ROSHKO | 3-20-06 |
| CKD BY | CONNIN | 07-01-06 |
| PROJECT LEADER (APP) | THORP | 07-01-06 |

THE ONLY TRUE REPRESENTATION OF A PRODUCT IS THE 3D SOLID MODEL.

INGERSOLL-RAND
PRODUCTION EQUIPMENT

Ingersoll-Rand Company
Power Productivity Sector
Form 01

DRAWING TITLE
COMBINATION

ECN 15295447

PART NO. C38XX1-X

REV 00

SIZE D SCALE FULL SHEET 1 OF 1