REV	DESCRIPTION	DATE	ECN
--	----------	--------	--------
--	----------	--------	--------

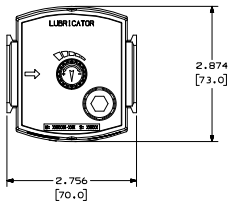

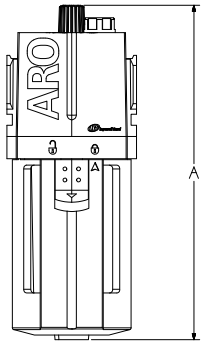

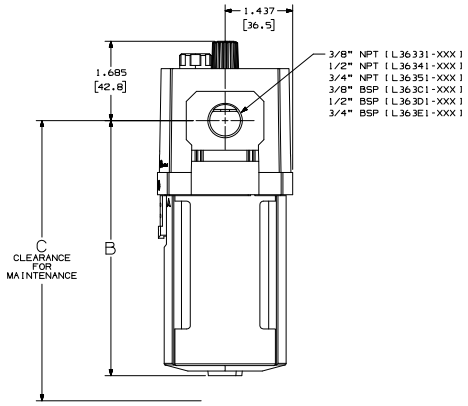

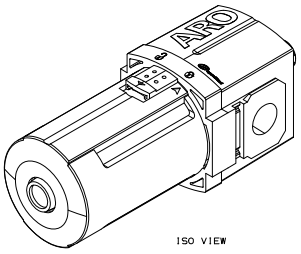

ISO VIEW

MODEL	A [MM]	B [MM]	C [MM]	BOWL OPTION
L363X1-X0X	7.087 [180.0]	5.402 [137.2]	9.402 [238.8]	POLYCARBONATE
L363X1-X1X	7.165 [182.0]	5.480 [139.2]	8.980 [228.1]	METAL W/SIGHT GLASS
L363X1-X2X	7.165 [182.0]	5.480 [139.2]	8.980 [228.1]	METAL

OUTLINE DRAWING

NEXT ASM. (REF)	USED ON (REF)
----------	----------

UNLESS OTHERWISE SPECIFIED: DIMENSIONS ARE INCHES PER ANSI Y14.5M-1994

REMOVE ALL BURRS AND SHARP EDGES

BREAK NOT TO EXCEED .015

ANGLES: ±0°30'
CONC .005 TIR.

ALL MACHINED SURFACES ARE 125

THIRD ANGLE PROJECTION

WARNING!
DO NOT USE IN ACCORDANCE WITH THIS DOCUMENT IS A VIOLATION OF APPLICABLE LAW, OTHER THAN FOR WHICH IT IS INTENDED, MAY VIOLATE REGULATIONS AND SERIOUSLY MALFUNCTION OR MALFUNCTION.

COPYRIGHT © 2008
INGERSOLL-RAND COMPANY
ALL RIGHTS RESERVED

THIS DOCUMENT CONTAINS CONFIDENTIAL AND TRADE SECRET INFORMATION. IT IS THE PROPERTY OF INGERSOLL-RAND COMPANY AND IS LENT ONLY FOR THE PURPOSE OF BUSINESS DEALINGS WITH INGERSOLL-RAND. THE RECEIPT AND RETENTION OF THE DOCUMENT ACCEPTS THE DOCUMENT IN CONFIDENCE AND AGREES THAT, EXCEPT AS AUTHORIZED IN WRITING BY INGERSOLL-RAND COMPANY, IT WILL NOT BE REPRODUCED IN WHOLE OR IN PART, NOR DISCLOSED TO THIRD PARTIES, NOR TO THE DISCLOSURE OF INFORMATION THEREIN. (2) NOT COPY THE DOCUMENT. (3) NOT DISCLOSE TO OTHERS EXCEPT THE DOCUMENT OR THE CONFIDENTIAL OR TRADE SECRET INFORMATION CONTAINED THEREIN. (4) UPON REQUEST, AGREE TO RETURN THE DOCUMENT, OR UPON DEMAND, RETURN THE DOCUMENT, ALL COPIES THEREOF, AND ALL MATERIAL COPIED THEREFROM.

MATERIAL	N/A		
	N/A		
HEAT TREAT	N/A		
FINISH	N/A		

ENGLISH

DONOTES REQUIRED MINOR DIMENSION		
DWN BY	ROSWKO	9-20-06
CKD BY	CONNIN	07-01-08
PROJECT LEADER (ENG)	THORP	07-01-08

THE ONLY TRUE REPRESENTATION OF A DRAWING IS THE 3D SOLID MODEL.

INGERSOLL-RAND
PRODUCTION EQUIPMENT

Ingersoll-Rand Company
Pump Products Division
Bryan OH

DRAWING TITLE
LUBRICATOR

ECN	PART NO.	REV
15295421	L363X1-X	00

SIZE D SCALE FULL SHEET 1 OF 1