REV	DESCRIPTION	DATE	ECN
00	----------	--------	--------
--	----------	--------	--------

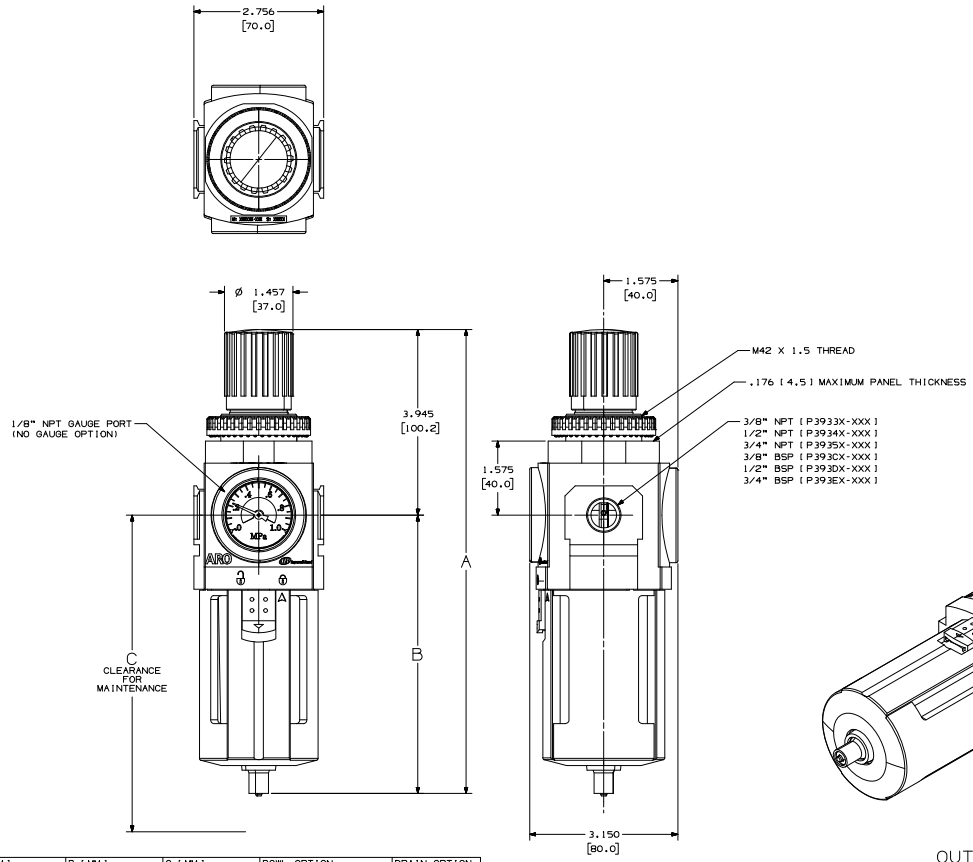

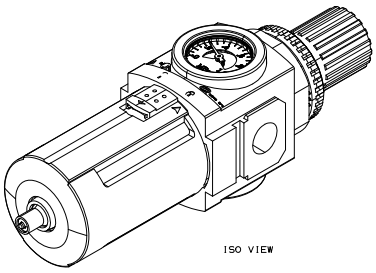

OUTLINE DRAWING

MODEL	A [MM]	B [MM]	C [MM]	BOWL OPTION	DRAIN OPTION
P393XX-X00	9.961 [253.0]	6.016 [152.8]	9.016 [229.0]	POLY W/GUARD	MANUAL
P393XX-X10	10.039 [255.0]	6.094 [154.8]	8.594 [218.3]	METAL W/SIGHT GLASS	MANUAL
P393XX-X20	10.039 [255.0]	6.094 [154.8]	8.594 [218.3]	METAL	MANUAL
P393XX-X04	10.787 [274.0]	6.843 [173.8]	9.843 [250.0]	POLY W/GUARD	AUTOMATIC
P393XX-X14	10.866 [276.0]	6.921 [175.8]	9.421 [239.3]	METAL W/SIGHT GLASS	AUTOMATIC
P393XX-X24	10.866 [276.0]	6.921 [175.8]	9.421 [239.3]	METAL	AUTOMATIC

NEXT ASM. (REF) | USED ON (REF)

UNLESS OTHERWISE SPECIFIED: DIMENSIONS ARE INCHES PER ANSI Y14.5M-1994

REMOVE ALL BURRS AND SHARP EDGES

BREAK NOT TO EXCEED .015

ANGLES: (+/-2°)
CONC .015 TIR.

ALL MACHINED SURFACES ARE 125

THIRD ANGLE PROJECTION

REPRODUCTION IN WHOLE OR IN PART OF THIS DRAWING IS STRICTLY PROHIBITED EXCEPT AS AUTHORIZED IN WRITING BY INGERSOLL-RAND COMPANY.

COPYRIGHT © 2008
INGERSOLL-RAND
ALL RIGHTS RESERVED

THIS DOCUMENT CONTAINS CONFIDENTIAL AND TRADE SECRET INFORMATION. IT IS THE PROPERTY OF INGERSOLL-RAND COMPANY AND IS LOANED TO THE RECIPIENT ON A CONFIDENTIAL BASIS. THE USE AND RETENTION OF THE DOCUMENT ACCEPTS THE DOCUMENT IN CONFIDENCE AND AGREES THAT, EXCEPT AS AUTHORIZED IN WRITING BY INGERSOLL-RAND COMPANY, IT WILL NOT (1) DISCLOSE, DISTRIBUTE OR TRANSFER OR PERMIT DISCLOSURE, DISTRIBUTION OR TRANSFER OF INFORMATION THEREIN, (2) NOT COPY THE DOCUMENT, (3) NOT DISCLOSE TO ENTITIES EXCEPT THE RECIPIENT OR THE CORPORATION OF WHICH THE RECIPIENT IS A DIRECT OR INDIRECT SUBSIDIARY, (4) UPON REQUEST TO RETURN THE DOCUMENT, OR UPON DEMAND, RETURN THE DOCUMENT, ALL COPIES THEREOF, AND ALL MATERIAL COPIED THEREFROM.

MATERIAL: N/A
N/A
HEAT TREAT: N/A
FINISH: N/A

ENGLISH
DENOTES REQUIRED MERGE DIMENSION

DWN BY	ROSHKO	3-20-08
CKD BY	CONNIN	07-01-08
RELEASE ENGR	THORP	07-01-08

INGERSOLL-RAND
PRODUCTION EQUIPMENT

Ingersoll-Rand Company
Power Products Division
Rum MI

DRAWING TITLE: P16BYBACK

THE ONLY TRUE REPRESENTATION OF A DRAWING IS THE 3D SOLID MODEL.

ECN: 15295439
PART NO.: P393XX-X
REV: 00
SIZE: D SCALE: N/A SHEET 1 OF 1