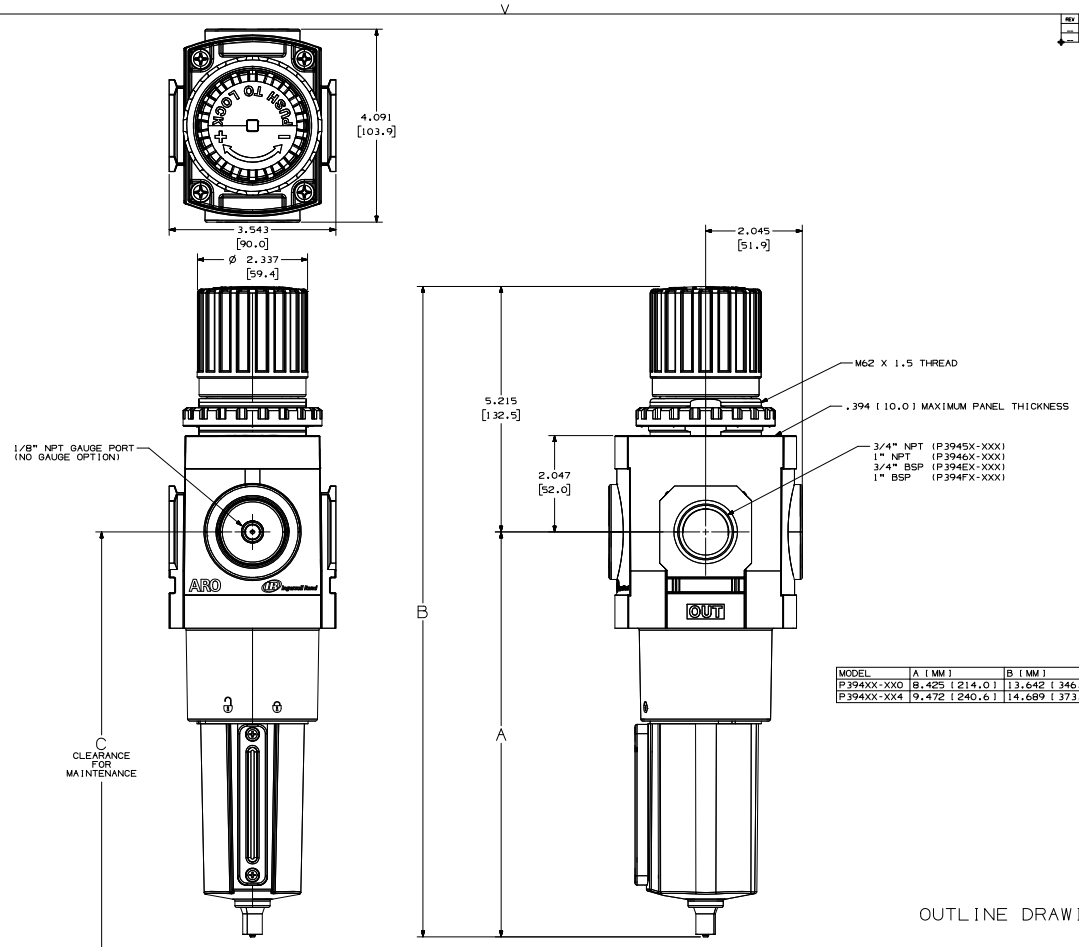

MODEL	A [MM]	B [MM]	C [MM]	DRAIN
P394XX-XX0	8.425 [214.0]	13.642 [346.5]	10.925 [277.5]	MANUAL
P394XX-XX4	9.472 [240.6]	14.689 [373.1]	11.972 [304.1]	AUTOMATIC

OUTLINE DRAWING

REV	DESCRIPTION	DATE	ECN
--			
--			

UNLESS OTHERWISE SPECIFIED DIMENSIONS ARE INCHES PER ANSI Y14.5M-1994

REMOVE ALL BURRS AND SHARP EDGES
BREAK NOT TO EXCEED .015

ANGLES: 1/2° DEC
CONC .015 TIR.

ALL MACHINED SURFACES ARE 125

THIRD ANGLE PROJECTION

REPRODUCTION OF IN-COPY OF THIS DRAWING IS A VIOLATION OF THE APPLICABLE LAW(S) OF THE UNITED STATES AND OTHER COUNTRIES REGULATIONS AND STATE MANUFACTURER WARRANTY, SUBSISTS IN AUTHORITY.

COPYRIGHT © 2008
INGERSOLL-RAND CO.
ALL RIGHTS RESERVED

THIS DOCUMENT CONTAINS CONFIDENTIAL AND TRADE SECRET INFORMATION. IT IS THE PROPERTY OF INGERSOLL-RAND COMPANY AND IS LENT ONLY FOR THE PURPOSE OF BUSINESS DEALINGS WITH INGERSOLL-RAND. THE RECEIPT AND RETENTION OF THE DOCUMENT ACCEPTS THE DOCUMENT IN CONFIDENCE AND AGREES THAT, EXCEPT AS AUTHORIZED IN WRITING BY INGERSOLL-RAND COMPANY, IT SHALL (1) NOT REPRODUCE, COPY OR TRANSFER IT TO ANY OTHER PERSON OR ENTITY, OR TRANSFER THE INFORMATION THEREIN, (2) NOT COPY THE DOCUMENT, (3) NOT DISCLOSE TO OTHERS EXCEPT THE DOCUMENT OR THE CONFIDENTIAL OR TRADE SECRET INFORMATION THEREIN, (4) NOT USE THE DOCUMENT OR THE INFORMATION TO RETAIN THE DOCUMENT, UPON DEMAND, RETURN THE DOCUMENT, ALL COPIES THEREOF, AND ALL MATERIAL COPIED THEREFROM.

MATERIAL: N/A
N/A
HEAT TREAT: N/A
FINISH: N/A

ENGLISH
DENOTES REQUIRED MERGE DIMENSION

DWN BY	ROSHKO	07-14-08
CKD BY	CONNIN	07-14-08
PROJECT LEADER APPR	THORP	07-14-08

THE ONLY TRUE REPRESENTATION OF A PRODUCT IS THE 3D SOLID MODEL.

INGERSOLL-RAND
PRODUCTION EQUIPMENT

Ingersoll-Rand Company
Form Products Division
Rush OH

DRAWING TITLE: PIGGYBACK

ECN: 15312556
PART NO.: P394XX-X
REV: 00
SIZE: D SCALE: 1:1 SHEET 1 OF 1

NEXT ASM. (REF) | USED ON (REF)